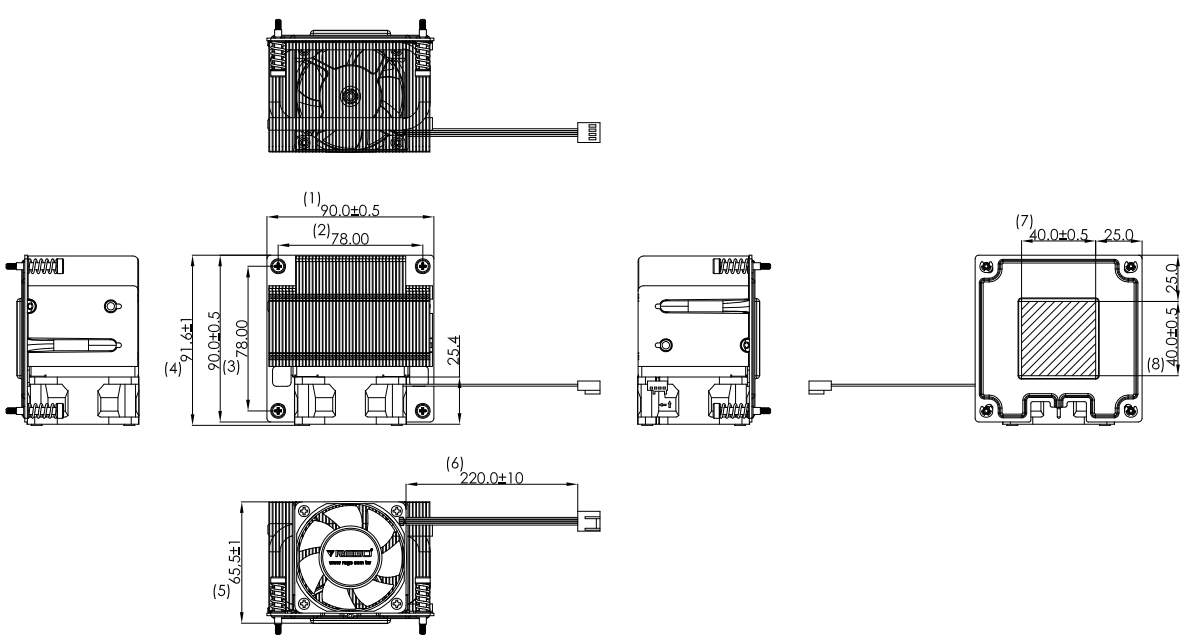

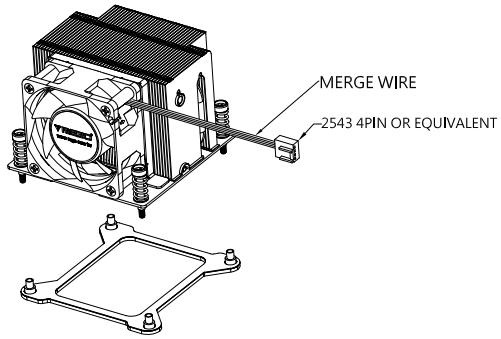

SCALE 4:1

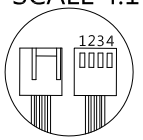

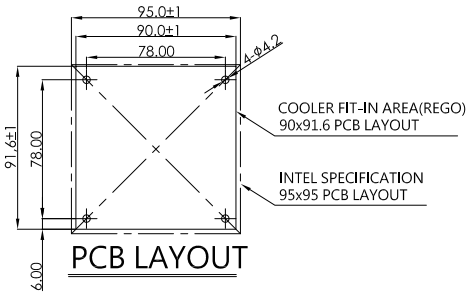

PCB LAYOUT

NOTES
1.LEAD WIRE UL 1061 AWG#26
PIN 1:BLACK WIRE---(-)
PIN 2:YELLOW WIRE---(+)
PIN 3:GREEN WIRE---(SIGNAL)
PIN 4:BLUE WIRE---(PWM INPUT)
2.HOUSING:2543-4P(BEIGE) OR EQUIVALENT

NOTES:

NO	PART NAME / NUMBER	DESCRIPTION	PCS
0	RGE-ST002-1	ϕ30	1
1	1-0200010877	D5.8x32L	4
2	AXIAL FAN	60x25.4	1
3	RGD3226VCHP-N		1
4	THERMAL GREASE	X-23-7783D (40x40x0.15)	1
5	850-BP1700-5	89x89x9.05	1

REGO

PROPRIETARY NOTE
THIS DOCUMENT CONTAINS CONFIDENTIAL INFORMATION AND PROPRIETARY TO REGO ELECTRONICS AND SHALL NOT BE REPRODUCED OR DISCLOSED TO OTHER DOCUMENTS OR USED FOR ANY PURPOSE OTHER THAN THAT FOR WHICH WAS OBTAINED WITHOUT THE EXPRESSED WRITTEN CONSENT OF REGO ELECTRONICS.

PROJECT	APPROVED: CHRIS	MATERIAL: SEE NOTE	DATE: 2021/12/23	.X° ± 3° / .X ± 0.30 / .XX ± 0.20 / .XXX ± 0.10
TITLE: 2U CPU COOLER FOR INTEL LGA1700 PROCESSORS	CHECKED: LEVI	FINISH: SEE NOTE	SCALE: 1 : 1	
PART NO: RGD3226VCHP-EF75-002	DRAWN: VIC	UNITS: mm	REV: A	SHEET: 1 OF 1